COLUMN SCHEDULE

MARK LEVEL		C1	C2	C3	C4	C5	C6	C7	C8
ABOVE TO TERRACE LVL.	S.W.SIZE / TIES GROUP	300X600 G1	300X600 G1	300X600 G1	300X750 G2	300X750 G2	300X715 G1		300X600 G1
	VERTICAL REINF.	A = 4-16ϕ B = 2-12ϕ C = 4-12ϕ D = 4-12ϕ	A = 4-16ϕ B = 2-12ϕ C = 4-12ϕ D = 4-12ϕ	A = 4-16ϕ B = 2-12ϕ C = 4-12ϕ D = 4-12ϕ	A = 4-16ϕ B = 2-12ϕ C = 4-12ϕ D = 4-12ϕ E = 2-12ϕ	A = 4-16ϕ B = 2-12ϕ C = 4-12ϕ D = 4-12ϕ E = 2-12ϕ	A = 4-16ϕ B = 2-12ϕ C = 4-12ϕ D = 4-12ϕ E = 2-12ϕ		A = 4-16ϕ B = 2-12ϕ C = 4-12ϕ D = 4-12ϕ
	CONCRETE GRADE	M-30	M-30	M-30	M-30	M-30	M-30		M-30
	REFER SECTION	A	A	A	B	B	C		A
TERRACE LVL. TO 14TH FLOOR LVL.	S.W.SIZE / TIES GROUP	300X600 G1	300X600 G1	300X600 G1	300X750 G2	300X750 G2	300X715 G1	300X800 G1	300X600 G1
	VERTICAL REINF.	A = 4-16ϕ B = 2-12ϕ C = 4-12ϕ D = 4-12ϕ	A = 4-16ϕ B = 2-12ϕ C = 4-12ϕ D = 4-12ϕ	A = 4-16ϕ B = 2-12ϕ C = 4-12ϕ D = 4-12ϕ	A = 4-16ϕ B = 2-12ϕ C = 4-12ϕ D = 4-12ϕ E = 2-12ϕ	A = 4-16ϕ B = 2-12ϕ C = 4-12ϕ D = 4-12ϕ E = 2-12ϕ	A = 4-16ϕ B = 2-12ϕ C = 4-12ϕ D = 4-12ϕ E = 2-12ϕ	A = 4-16ϕ B = 2-12ϕ C = 4-12ϕ D = 4-12ϕ E = 4-12ϕ	A = 4-16ϕ B = 2-12ϕ C = 4-12ϕ D = 4-12ϕ
	CONCRETE GRADE	M-30	M-30	M-30	M-30	M-30	M-30	M-30	M-30
	REFER SECTION	A	A	A	B	B	C	D	A
14TH FLOOR LVL. TO 13TH FLOOR LVL.	S.W.SIZE / TIES GROUP	300X600 G1	300X600 G1	300X600 G1	300X750 G2	300X750 G2	300X715 G1	300X800 G1	300X600 G1
	VERTICAL REINF.	A = 4-16ϕ B = 2-12ϕ C = 4-12ϕ D = 4-12ϕ	A = 4-16ϕ B = 2-12ϕ C = 4-12ϕ D = 4-12ϕ	A = 4-16ϕ B = 2-12ϕ C = 4-12ϕ D = 4-12ϕ	A = 4-16ϕ B = 2-12ϕ C = 4-12ϕ D = 4-12ϕ E = 2-12ϕ	A = 4-16ϕ B = 2-12ϕ C = 4-12ϕ D = 4-12ϕ E = 2-12ϕ	A = 4-16ϕ B = 2-12ϕ C = 4-12ϕ D = 4-12ϕ E = 2-12ϕ	A = 4-16ϕ B = 2-12ϕ C = 4-12ϕ D = 4-12ϕ E = 4-12ϕ	A = 4-16ϕ B = 2-12ϕ C = 4-12ϕ D = 4-12ϕ
	CONCRETE GRADE	M-30	M-30	M-30	M-30	M-30	M-30	M-30	M-30
	REFER SECTION	A	A	A	B	B	C	D	A
13TH FLOOR LVL. TO 12TH FLOOR LVL.	S.W.SIZE / TIES GROUP	300X600 G1	300X600 G1	300X600 G1	300X750 G2	300X750 G2	300X715 G1	300X800 G1	300X600 G1
	VERTICAL REINF.	A = 4-16ϕ B = 2-12ϕ C = 4-12ϕ D = 4-12ϕ	A = 4-16ϕ B = 2-12ϕ C = 4-12ϕ D = 4-12ϕ	A = 4-16ϕ B = 2-12ϕ C = 4-12ϕ D = 4-12ϕ	A = 4-16ϕ B = 2-12ϕ C = 4-12ϕ D = 4-12ϕ E = 2-12ϕ	A = 4-16ϕ B = 2-12ϕ C = 4-12ϕ D = 4-12ϕ E = 2-12ϕ	A = 4-16ϕ B = 2-12ϕ C = 4-12ϕ D = 4-12ϕ E = 2-12ϕ	A = 4-16ϕ B = 2-12ϕ C = 4-12ϕ D = 4-12ϕ E = 4-12ϕ	A = 4-16ϕ B = 2-12ϕ C = 4-12ϕ D = 4-12ϕ
	CONCRETE GRADE	M-30	M-30	M-30	M-30	M-30	M-30	M-30	M-30
	REFER SECTION	A	A	A	B	B	C	D	A
12TH FLOOR LVL. TO 11TH FLOOR LVL.	S.W.SIZE / TIES GROUP	300X600 G1	300X600 G1	300X600 G1	300X750 G2	300X750 G2	300X715 G1	300X800 G1	300X600 G1
	VERTICAL REINF.	A = 4-16ϕ B = 2-12ϕ C = 4-12ϕ D = 4-12ϕ	A = 4-16ϕ B = 2-12ϕ C = 4-12ϕ D = 4-12ϕ	A = 4-16ϕ B = 2-12ϕ C = 4-12ϕ D = 4-12ϕ	A = 4-16ϕ B = 2-12ϕ C = 4-12ϕ D = 4-12ϕ E = 2-12ϕ	A = 4-16ϕ B = 2-12ϕ C = 4-12ϕ D = 4-12ϕ E = 2-12ϕ	A = 4-16ϕ B = 2-12ϕ C = 4-12ϕ D = 4-12ϕ E = 2-12ϕ	A = 4-16ϕ B = 2-12ϕ C = 4-12ϕ D = 4-12ϕ E = 4-12ϕ	A = 4-16ϕ B = 2-12ϕ C = 4-12ϕ D = 4-12ϕ
	CONCRETE GRADE	M-30	M-30	M-30	M-30	M-30	M-30	M-30	M-30
	REFER SECTION	A	A	A	B	B	C	D	A
11TH FLOOR LVL. TO 10TH FLOOR LVL.	S.W.SIZE / TIES GROUP	300X600 G1	300X600 G1	300X600 G1	300X750 G2	300X750 G2	300X715 G1	300X800 G1	300X600 G1
	VERTICAL REINF.	A = 4-16ϕ B = 2-12ϕ C = 4-12ϕ D = 4-12ϕ	A = 4-16ϕ B = 2-12ϕ C = 4-12ϕ D = 4-12ϕ	A = 4-16ϕ B = 2-12ϕ C = 4-12ϕ D = 4-12ϕ	A = 4-16ϕ B = 2-12ϕ C = 4-12ϕ D = 4-12ϕ E = 2-12ϕ	A = 4-16ϕ B = 2-12ϕ C = 4-12ϕ D = 4-12ϕ E = 2-12ϕ	A = 4-16ϕ B = 2-12ϕ C = 4-12ϕ D = 4-12ϕ E = 2-12ϕ	A = 4-16ϕ B = 2-12ϕ C = 4-12ϕ D = 4-12ϕ E = 4-12ϕ	A = 4-16ϕ B = 2-12ϕ C = 4-12ϕ D = 4-12ϕ
	CONCRETE GRADE	M-30	M-30	M-30	M-30	M-30	M-30	M-30	M-30
	REFER SECTION	A	A	A	B	B	C	D	A
10TH FLOOR LVL. TO 9TH FLOOR LVL.	S.W.SIZE / TIES GROUP	300X600 G1	300X600 G1	300X600 G1	300X750 G2	300X750 G2	300X715 G1	300X800 G1	300X600 G1
	VERTICAL REINF.	A = 4-16ϕ B = 2-12ϕ C = 4-12ϕ D = 4-12ϕ	A = 4-16ϕ B = 2-12ϕ C = 4-12ϕ D = 4-12ϕ	A = 4-16ϕ B = 2-12ϕ C = 4-12ϕ D = 4-12ϕ	A = 4-16ϕ B = 2-12ϕ C = 4-12ϕ D = 4-12ϕ E = 2-12ϕ	A = 4-16ϕ B = 2-12ϕ C = 4-12ϕ D = 4-12ϕ E = 2-12ϕ	A = 4-16ϕ B = 2-12ϕ C = 4-12ϕ D = 4-12ϕ E = 2-12ϕ	A = 4-16ϕ B = 2-12ϕ C = 4-12ϕ D = 4-12ϕ E = 4-12ϕ	A = 4-16ϕ B = 2-12ϕ C = 4-12ϕ D = 4-12ϕ
	CONCRETE GRADE	M-30	M-30	M-30	M-30	M-30	M-30	M-30	M-30
	REFER SECTION	A	A	A	B	B	C	D	A
9TH FLOOR LVL. TO 8TH FLOOR LVL.	S.W.SIZE / TIES GROUP	300X600 G1	300X600 G1	300X600 G1	300X750 G2	300X750 G2	300X715 G1	300X800 G1	300X600 G1
	VERTICAL REINF.	A = 4-16ϕ B = 2-12ϕ C = 4-12ϕ D = 4-12ϕ	A = 4-16ϕ B = 2-12ϕ C = 4-12ϕ D = 4-12ϕ	A = 4-16ϕ B = 2-12ϕ C = 4-12ϕ D = 4-12ϕ	A = 4-16ϕ B = 2-12ϕ C = 4-12ϕ D = 4-12ϕ E = 2-12ϕ	A = 4-16ϕ B = 2-12ϕ C = 4-12ϕ D = 4-12ϕ E = 2-12ϕ	A = 4-16ϕ B = 2-12ϕ C = 4-12ϕ D = 4-12ϕ E = 2-12ϕ	A = 4-16ϕ B = 2-12ϕ C = 4-12ϕ D = 4-12ϕ E = 4-12ϕ	A = 4-16ϕ B = 2-12ϕ C = 4-12ϕ D = 4-12ϕ
	CONCRETE GRADE	M-30	M-30	M-30	M-30	M-30	M-30	M-30	M-30
	REFER SECTION	A	A	A	B	B	C	D	A
8TH FLOOR LVL. TO 7TH FLOOR LVL.	S.W.SIZE / TIES GROUP	300X600 G1	300X600 G1	300X600 G1	300X750 G2	300X750 G2	300X715 G1	300X800 G1	300X600 G1
	VERTICAL REINF.	A = 4-16ϕ B = 2-12ϕ C = 4-12ϕ D = 4-12ϕ	A = 4-16ϕ B = 2-12ϕ C = 4-12ϕ D = 4-12ϕ	A = 4-16ϕ B = 2-12ϕ C = 4-12ϕ D = 4-12ϕ	A = 4-16ϕ B = 2-12ϕ C = 4-12ϕ D = 4-12ϕ E = 2-12ϕ	A = 4-16ϕ B = 2-12ϕ C = 4-12ϕ D = 4-12ϕ E = 2-12ϕ	A = 4-16ϕ B = 2-12ϕ C = 4-12ϕ D = 4-12ϕ E = 2-12ϕ	A = 4-16ϕ B = 2-12ϕ C = 4-12ϕ D = 4-12ϕ E = 4-12ϕ	A = 4-16ϕ B = 2-12ϕ C = 4-12ϕ D = 4-12ϕ
	CONCRETE GRADE	M-30	M-30	M-30	M-30	M-30	M-30	M-30	M-30
	REFER SECTION	A	A	A	B	B	C	D	A
7TH FLOOR LVL. TO 6TH FLOOR LVL.	S.W.SIZE / TIES GROUP	300X600 G1	300X600 G1	300X600 G1	300X750 G2	300X750 G2	300X715 G1	300X800 G1	300X600 G1
	VERTICAL REINF.	A = 4-16ϕ B = 2-12ϕ C = 4-12ϕ D = 4-12ϕ	A = 4-16ϕ B = 2-12ϕ C = 4-12ϕ D = 4-12ϕ	A = 4-16ϕ B = 2-12ϕ C = 4-12ϕ D = 4-12ϕ	A = 4-16ϕ B = 2-12ϕ C = 4-12ϕ D = 4-12ϕ E = 2-12ϕ	A = 4-16ϕ B = 2-12ϕ C = 4-12ϕ D = 4-12ϕ E = 2-12ϕ	A = 4-16ϕ B = 2-12ϕ C = 4-12ϕ D = 4-12ϕ E = 2-12ϕ	A = 4-16ϕ B = 2-12ϕ C = 4-12ϕ D = 4-12ϕ E = 4-12ϕ	A = 4-16ϕ B = 2-12ϕ C = 4-12ϕ D = 4-12ϕ
	CONCRETE GRADE	M-30	M-30	M-30	M-30	M-30	M-30	M-30	M-30
	REFER SECTION	A	A	A	B	B	C	D	A
6TH FLOOR LVL. TO 5TH FLOOR LVL.	S.W.SIZE / TIES GROUP	300X600 G1	300X600 G1	300X600 G1	300X750 G2	300X750 G2	300X715 G1	300X800 G1	300X600 G1
	VERTICAL REINF.	A = 4-16ϕ B = 2-12ϕ C = 4-12ϕ D = 4-12ϕ	A = 4-16ϕ B = 2-12ϕ C = 4-12ϕ D = 4-12ϕ	A = 4-16ϕ B = 2-12ϕ C = 4-12ϕ D = 4-12ϕ	A = 4-16ϕ B = 2-12ϕ C = 4-12ϕ D = 4-12ϕ E = 2-12ϕ	A = 4-16ϕ B = 2-12ϕ C = 4-12ϕ D = 4-12ϕ E = 2-12ϕ	A = 4-16ϕ B = 2-12ϕ C = 4-12ϕ D = 4-12ϕ E = 2-12ϕ	A = 4-16ϕ B = 2-12ϕ C = 4-12ϕ D = 4-12ϕ E = 4-12ϕ	A = 4-16ϕ B = 2-12ϕ C = 4-12ϕ D = 4-12ϕ
	CONCRETE GRADE	M-30	M-30	M-30	M-30	M-30	M-30	M-30	M-30
	REFER SECTION	A	A	A	B	B	C	D	A
5TH FLOOR LVL. TO 4TH FLOOR LVL.	S.W.SIZE / TIES GROUP	300X600 G1	300X600 G1	300X600 G1	300X750 G1	300X750 G1	300X715 G1	300X800 G1	300X600 G1
	VERTICAL REINF.	A = 4-16ϕ B = 2-12ϕ C = 4-12ϕ D = 4-12ϕ	A = 4-16ϕ B = 2-12ϕ C = 4-12ϕ D = 4-12ϕ	A = 4-16ϕ B = 2-16ϕ C = 4-16ϕ D = 4-12ϕ	A = 4-16ϕ B = 2-12ϕ C = 4-12ϕ D = 4-12ϕ E = 2-12ϕ	A = 4-16ϕ B = 2-12ϕ C = 4-12ϕ D = 4-12ϕ E = 2-12ϕ	A = 4-16ϕ B = 2-12ϕ C = 4-12ϕ D = 4-12ϕ E = 2-12ϕ	A = 4-16ϕ B = 2-12ϕ C = 4-12ϕ D = 4-12ϕ E = 4-12ϕ	A = 4-16ϕ B = 2-16ϕ C = 4-16ϕ D = 4-12ϕ
	CONCRETE GRADE	M-35	M-35	M-35	M-35	M-35	M-35	M-35	M-35
	REFER SECTION	A	A	A	B	B	C	D	A
4TH FLOOR LVL. TO 3RD FLOOR LVL.	S.W.SIZE / TIES GROUP	300X600 G1	300X600 G1	300X600 G1	300X750 G1	300X750 G1	300X715 G1	300X800 G1	300X600 G1
	VERTICAL REINF.	A = 4-16ϕ B = 2-12ϕ C = 4-12ϕ D = 4-12ϕ	A = 4-16ϕ B = 2-16ϕ C = 4-16ϕ D = 4-12ϕ	A = 4-20ϕ B = 2-12ϕ C = 4-16ϕ D = 4-16ϕ	A = 4-16ϕ B = 2-12ϕ C = 4-16ϕ D = 4-12ϕ E = 2-12ϕ	A = 4-16ϕ B = 2-12ϕ C = 4-16ϕ D = 4-12ϕ E = 2-12ϕ	A = 4-16ϕ B = 2-12ϕ C = 4-16ϕ D = 4-12ϕ E = 2-12ϕ	A = 4-16ϕ B = 2-12ϕ C = 4-16ϕ D = 4-12ϕ E = 4-12ϕ	A = 4-16ϕ B = 2-16ϕ C = 4-16ϕ D = 4-12ϕ
	CONCRETE GRADE	M-35	M-35	M-35	M-35	M-35	M-35	M-35	M-35
	REFER SECTION	A	A	A	B	B	C	D	A
3RD FLOOR LVL. TO 2ND FLOOR LVL.	S.W.SIZE / TIES GROUP	300X600 G1	300X600 G1	300X600 G1	300X750 G1	300X750 G1	300X715 G1	300X800 G1	300X600 G1
	VERTICAL REINF.	A = 4-16ϕ B = 2-12ϕ C = 4-12ϕ D = 4-12ϕ	A = 4-16ϕ B = 2-16ϕ C = 4-16ϕ D = 4-12ϕ	A = 4-20ϕ B = 2-20ϕ C = 4-16ϕ D = 4-16ϕ	A = 4-20ϕ B = 2-16ϕ C = 4-16ϕ D = 4-16ϕ E = 2-16ϕ	A = 4-16ϕ B = 2-12ϕ C = 4-16ϕ D = 4-12ϕ E = 2-12ϕ	A = 4-16ϕ B = 2-12ϕ C = 4-16ϕ D = 4-12ϕ E = 2-12ϕ	A = 4-16ϕ B = 2-12ϕ C = 4-16ϕ D = 4-12ϕ E = 4-12ϕ	A = 4-16ϕ B = 2-16ϕ C = 4-16ϕ D = 4-16ϕ
	CONCRETE GRADE	M-35	M-35	M-35	M-35	M-35	M-35	M-35	M-35
	REFER SECTION	A	A	A	B	B	C	D	A
2ND FLOOR LVL. TO 1ST FLOOR LVL.	S.W.SIZE / TIES GROUP	300X600 G1	300X600 G1	300X600 G1	300X750 G1	300X750 G1	300X715 G1	300X800 G1	300X600 G1
	VERTICAL REINF.	A = 4-16ϕ B = 2-12ϕ C = 4-12ϕ D = 4-12ϕ	A = 4-16ϕ B = 2-16ϕ C = 4-16ϕ D = 4-16ϕ	A = 4-25ϕ B = 2-20ϕ C = 4-20ϕ D = 4-20ϕ	A = 4-20ϕ B = 2-20ϕ C = 4-20ϕ D = 4-16ϕ E = 2-16ϕ	A = 4-16ϕ B = 2-12ϕ C = 4-16ϕ D = 4-12ϕ E = 2-12ϕ	A = 4-16ϕ B = 2-12ϕ C = 4-16ϕ D = 4-12ϕ E = 2-12ϕ	A = 4-16ϕ B = 2-12ϕ C = 4-16ϕ D = 4-12ϕ E = 4-12ϕ	A = 4-20ϕ B = 2-16ϕ C = 4-16ϕ D = 4-16ϕ
	CONCRETE GRADE	M-35	M-35	M-35	M-35	M-35	M-35	M-35	M-35
	REFER SECTION	A	A	A	B	B	C	D	A
1ST FLOOR LVL. TO GROUND FLOOR LVL.	S.W.SIZE / TIES GROUP	300X600 G1	300X600 G1	300X600 G1	300X750 G1	300X750 G1	300X715 G1	300X800 G1	300X600 G1
	VERTICAL REINF.	A = 4-16ϕ B = 2-12ϕ C = 4-16ϕ D = 4-12ϕ	A = 4-20ϕ B = 2-20ϕ C = 4-16ϕ D = 4-16ϕ	A = 4-25ϕ B = 2-20ϕ C = 4-20ϕ D = 4-20ϕ	A = 4-20ϕ B = 2-20ϕ C = 4-20ϕ D = 4-20ϕ E = 2-20ϕ	A = 4-16ϕ B = 2-16ϕ C = 4-16ϕ D = 4-16ϕ E = 2-12ϕ	A = 4-16ϕ B = 2-12ϕ C = 4-16ϕ D = 4-12ϕ E = 2-12ϕ	A = 4-16ϕ B = 2-12ϕ C = 4-16ϕ D = 4-12ϕ E = 4-12ϕ	A = 4-20ϕ B = 2-20ϕ C = 4-20ϕ D = 4-16ϕ
	CONCRETE GRADE	M-35	M-35	M-35	M-35	M-35	M-35	M-35	M-35
	REFER SECTION	A	A	A	B	B	C	D	A
GROUND FLOOR LVL. TO FOUNDATION LVL.	S.W.SIZE / TIES GROUP	300X600 G1	300X600 G1	300X600 G1	300X750 G1	300X750 G1	300X715 G1	300X800 G1	300X600 G1
	VERTICAL REINF.	A = 4-16ϕ B = 2-12ϕ C = 4-16ϕ D = 4-12ϕ	A = 4-20ϕ B = 2-20ϕ C = 4-16ϕ D = 4-16ϕ	A = 4-25ϕ B = 2-25ϕ C = 4-25ϕ D = 4-20ϕ	A = 4-20ϕ B = 2-20ϕ C = 4-20ϕ D = 4-20ϕ E = 2-20ϕ	A = 4-20ϕ B = 2-16ϕ C = 4-16ϕ D = 4-16ϕ E = 2-16ϕ	A = 4-16ϕ B = 2-12ϕ C = 4-16ϕ D = 4-12ϕ E = 2-12ϕ	A = 4-16ϕ B = 2-12ϕ C = 4-16ϕ D = 4-12ϕ E = 4-12ϕ	A = 4-20ϕ B = 2-20ϕ C = 4-20ϕ D = 4-20ϕ
	CONCRETE GRADE	M-35	M-35	M-35	M-35	M-35	M-35	M-35	M-35
	REFER SECTION	A	A	A	B	B	C	D	A
REMARK	DESCRIPTION	C1	C2	C3	C4	C5	C6	C7	C8

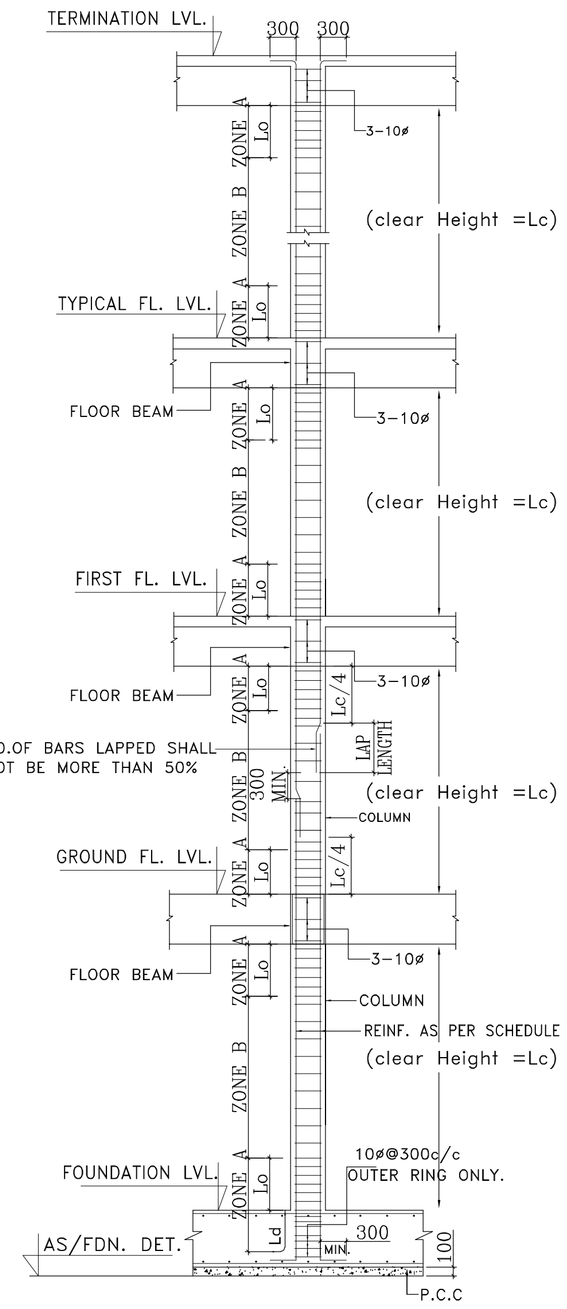

TYP. COLUMN TIES SPACING

* ZONE A – AS/COLUMN SCHEDULE
* ZONE B – AS/COLUMN SCHEDULE
* IN LAP PORTION STIRRUPS SPACING SHALL BE 150mm c/c (MAXIMUM)

FOR 32 MAIN BARS – MIN. TIES DIA SHALL BE 8

DETAIL–A

Lo. SHALL BE GREATER OF

(a) Lc/6

(b) LARGER LATERAL DIMENSION OF THE MEMBER.

(c) 450 mm MIN.

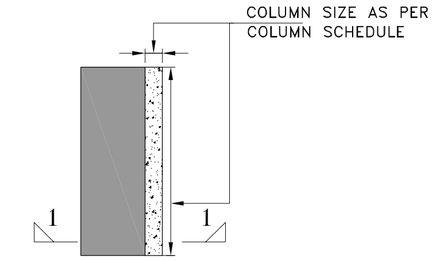

PLAN

TYP. DETAIL OF SHEAR WALL REDUCING IN SIZE (REDUCTION IN SIZE MORE THAN 75mm) CASE-I

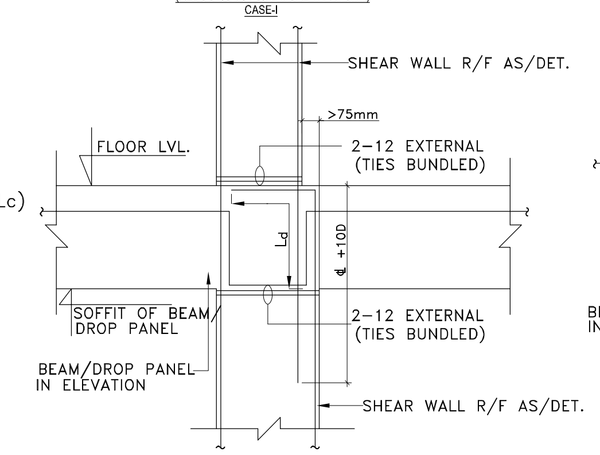

SECTION 1-1

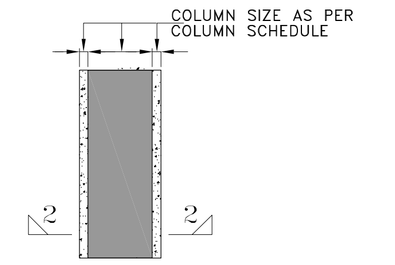

PLAN

TYP. DETAIL OF SHEAR WALL REDUCING IN SIZE (REDUCTION IN SIZE LESS THAN 75mm) CASE-II

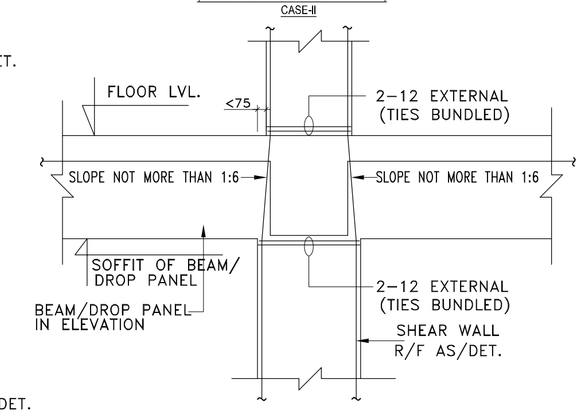

SECTION 2-2

OPTION-1

SLOPE OF 1:6 IS AVAILABLE IN BEAM OR DROP PANEL DEPTH

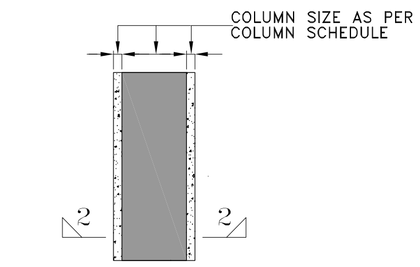

PLAN

TYP. DETAIL OF SHEAR WALL REDUCING IN SIZE (REDUCTION IN SIZE LESS THAN 75mm) CASE-II

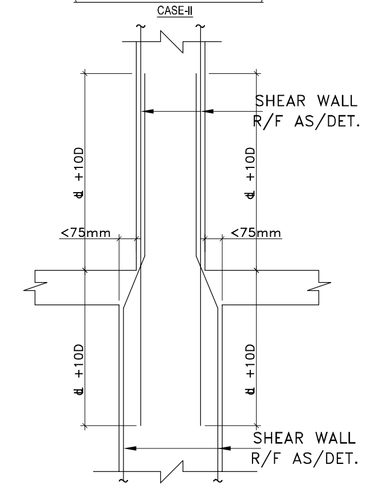

SECTION 2-2(OPTION)

SLOPE OF 1:6 IS NOT AVAILABLE IN BEAM OR DROP PANEL / SLAB DEPTH

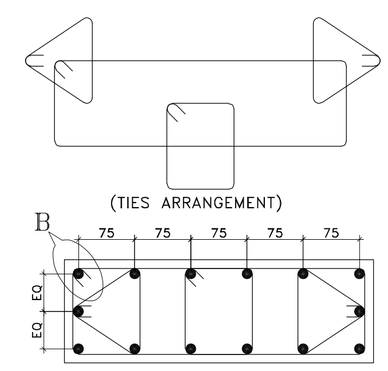

TYP. SHEAR WALL SECTION SHOWING PLACEMENT OF LONGITUDINAL BAR

ALL BARS SHALL BE PLACED EQUALLY SPACED (UNO)

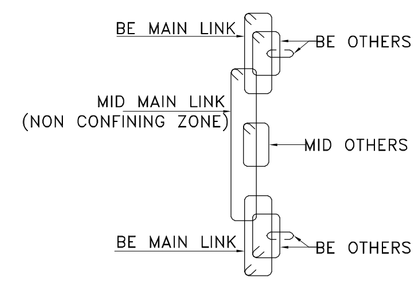

TYP. STIRRUPS MARK DETAIL

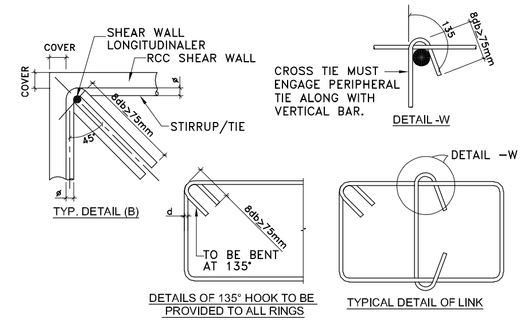

DETAILS OF 135° HOOK TO BE PROVIDED TO ALL RINGS

TYPICAL DETAIL OF LINK

LAP LENGTH (FOR Fe-500D) (d= DIA OF BAR)

	36d	40d	46d	49d
DIA	M-40 & ABOVE	M-35	M-30	M-25
32T	1160	1280	1480	1570
28T	1010	1120	1290	1380
25T	900	1000	1150	1225
20T	720	800	920	980
16T	580	640	740	790
12T	440	480	560	590
10T	360	400	460	490

LEGEND FOR LATERAL TIES

LEGEND	ZONE	TIES SPECIFICATION	
G1	A	10ϕ@75c/c	OUTER TIES
		+10ϕ@75c/c	INNER TIES
	B	8ϕ@150c/c	OUTER TIES
		+8ϕ@150c/c	INNER TIES
G2	A	8ϕ@75c/c	OUTER TIES
		+8ϕ@75c/c	INNER TIES
	B	8ϕ@150c/c	OUTER TIES
		+8ϕ@150c/c	INNER TIES

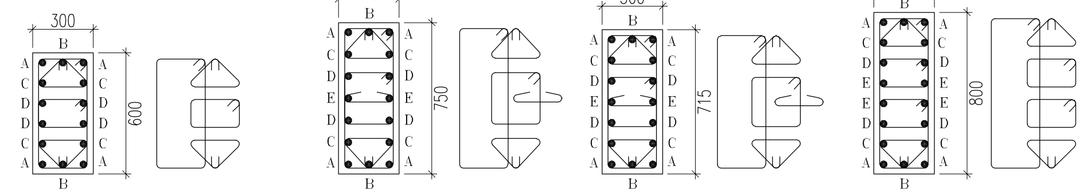

SECTION –A SECTION –B SECTION –C SECTION –D

THIS DRAWING IS THE COPYRIGHT OF THE CONSULTANTS AND MAY BE USED OR REPRODUCED ONLY WITH HIS PRIOR PERMISSION.

NOTES:

1. READ THIS DRAWING IN CONJUNCTION WITH RELEVANT ARCHITECTURAL DRAWINGS. ANY DISCREPANCY IF FOUND SHALL BE BROUGHT TO THE NOTICE OF CONSULTANT.
2. ALL DIMENSIONS & LEVELS ARE IN MILMETERS.
3. DO NOT SCALE ANY DIMENSION.
4. CONFIRM LOCATION OF WALLS WITH RELEVANT ARCH. DRGS.
5. GRADE OF CONCRETE
   RAFT : M–25 COLUMNS/SHEAR WALLS : AS/SCHDULE.
6. HYSD REINFORCEMENT BARS CONFIRM TO IS:1786:1979 FE 500D.
7. THE CLEAR COVER TO THE REINFORCEMENT SHALL BE AS FOLLOWS:–
   (a) RAFT TOP & SIDE: 50 MM
   RAFT BOTTOM : 75 MM
   (b) COLUMNS : 40 MM
   (c) BEAMS SIMPLE/CONTINUOUS : 40/30 MM
   (d) SLABS SIMPLE/CONTINUOUS : 25/25 MM
   (e) CHAJJAS/CONOPY : 20 MM
   (f) R.C.C. WALL FOR >230 : 40 MM
   (g) R.C.C. WALL FOR <=230 : 25 MM
   NOMINAL COVER IS THE DEPTH OF CONCRETE COVER TO ALL STEEL REINFORCEMENT INCLUDING LINKS/ TIES/ STIRRUPS.
8. NOT MORE THAN 50% OF THE BARS SHALL BE LAPPED AT ANY SECTION. LAPS CLOSE TO THE MID SPAN IN BOTTOM BARS & CLOSE TO SUPPORTS IN TOP BARS SHALL BE AVOIDED.
9. ALL R.C.C. TO BE MACHINE MIXED, VIBRATED AND CURED THOROUGHLY AS PER I.S 456–LATEST.
10. ALL FOOTING ARE CENTRALLY PLACED WITH RESPECTED TO THE CENTER LINE OF COLUMN.
11. REINFORCEMENT SHALL BE PROVIDED IN TWO LAYERS WHEREVER FOUND NECESSARY WITH SPACER BAR TO BE PROVIDED BETWEEN TWO LAYERS OF REINFORCEMENTS AS PER IS:456. SPACER BARS
12. ALL DIMENSIONS MUST BE CHECKED WITH ARCHITECT'S DRGS. & IN CASE OF ANY DISCREPANCY ARCHITECTS DRGS. SHALL PREVAIL.
13. ALL CONSTRUCTION JOINTS SHALL BE APROVED BY CONSULTANT ON THE BASIS OF SCHEME PREPARED BY CONTRACTOR.
14. TOP AND BOTTOM EXTRA BARS IN BEAMS TO EXTEND BEYOND THE FACE OF SUPPORT AS SHOWN IN DRG UNLESS OTHERWISE SHOWN.
15. THE FIRST STIRRUPS IN BEAMS SHALL BE AT A DISTANCE OF 50MM FROM THE JOINT FACE THE SPECIAL CONFINING REINFORCEMENT SHALL BE PROVIDED THROUGH THE JOINT AT THE GIVEN SPACING IN COLUMNS.
16. All ANGLES ARE RIGHT ANGLES UNLESS OTHERWISE SPECIFIED.
17. – – – – – – – – INDICATES BOTTOM BARS
    ———— INDICATES TOP BARS
18. RAFT FOUNDATION HAS BEEN DESIGNED FOR S.B.C. OF 27.00 T/M^2 AT A DEPTH OF 1.20M BELOW N.G.L.

KEY PLAN

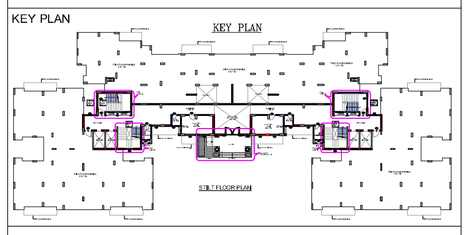
KEY PLAN
M
B
11TH FLOOR P